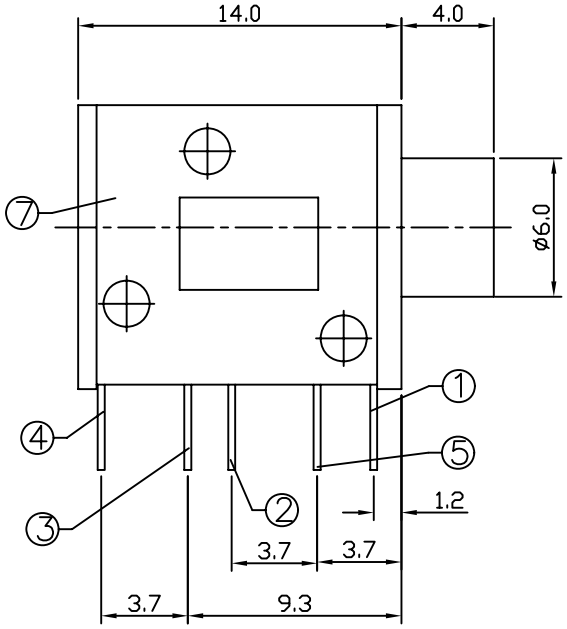

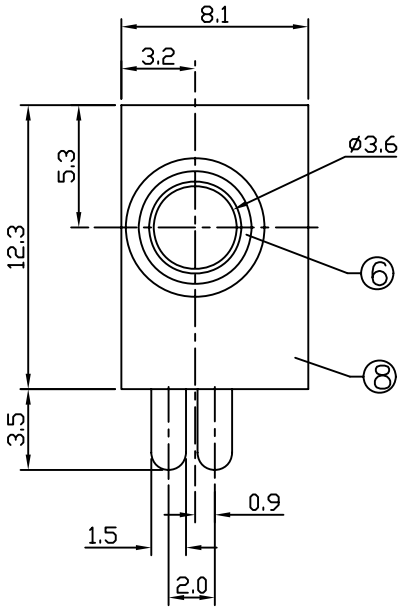

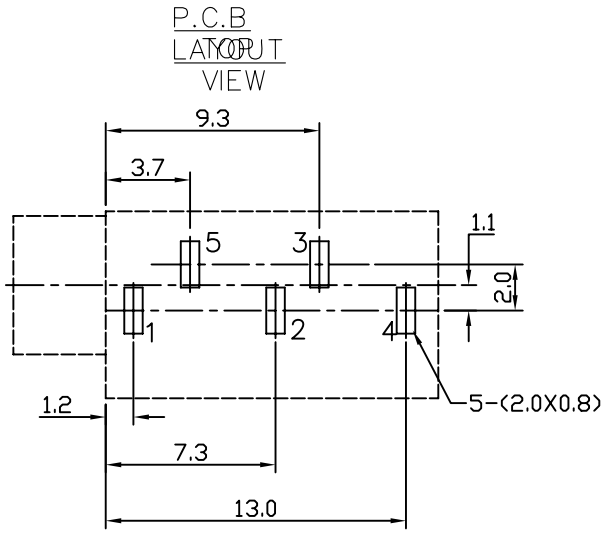

SCHEMATIC

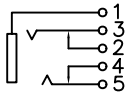

SPECIFICATION

1.Rating : DC 30V 0.5A;
2.Contact resistance: ≤0.03Ω;
3.Insulation resistance: ≥100MΩ (DC250V);
4.Withstand voltage: 500VAC ;
5.Insertion and extraction force: 3–20N;
6.life test: 5,000 cycles。

NO.	DESCRIPTION	QTY	MATERIAL	PLATING
8	HOUSING	1	PBT	
7	COVER	1	PBT	
6	AXIS SUPPORT	1	H59 BRASS	Ni–Plating
5	SPRING PIECE	1	PHOSPHOR BRONZE	Ag–Plating
4	CURVE PIECE	1	H62 BRASS	Ag–Plating
3	SPRING PIECE	1	PHOSPHOR BRONZE	Ag–Plating
2	CURVE PIECE	1	H62 BRASS	Ag–Plating
1	FLAT PIECE	1	H62 BRASS	Ag–Plating

UNIT: MM	TYPE:	MODEL NO	PAPER NO: A4		PAGE 1 OF 1	
	PHONE JACK	L-KLS1-TSJ3.5-008A-G L-KLS1-TSJ3.5-008A-PK L-KLS1-TSJ3.5-008EC	TOLERANCE	ANGLES	SCALE	VER
			±0.15	±1.5°	3:1	1
DESIGNER BY:		KLS ELECTRONIC CO., LTD				
CHECK BY:						
APPROVED BY:						