FOR-1754 Rev.1.1

Pitch Range In mm			Nominal Dimension Range In mm					— ⌒ ⏥
TO 6	Over 6 TO 10	Over 10 TO 24	TO 30	Over 30 TO 60	Over 60 TO 100	Over 100 TO 150	Over 150	0.1/10 ∠
±0.15	±0.20	±0.30	±0.30	±0.50	±0.70	±1.00	±1.30	±2°

(W/O COVER)

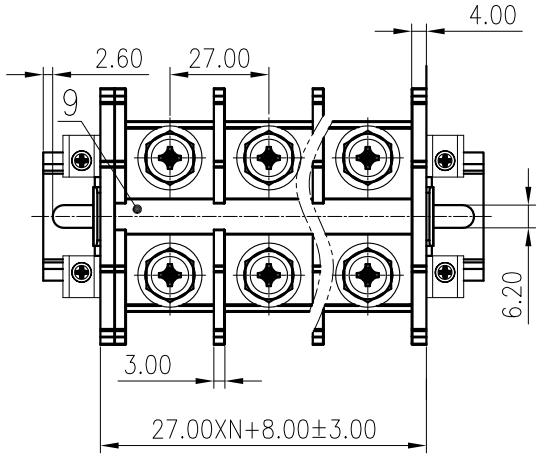

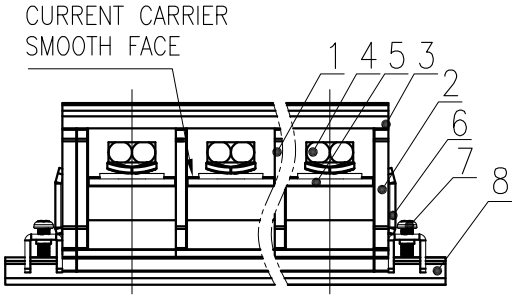

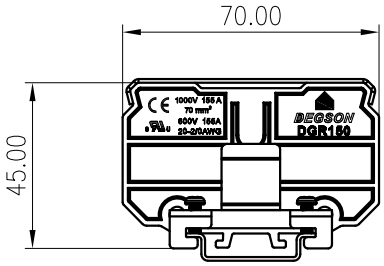

ITEM	NAME OF PART	MATERIAL	NOTES
9	TAG	PVC	UL94V-0
8	TRAMROAD	STEEL	Zn PLATED
7	SCREWS	STEEL	Zn PLATED
6	FASTENER	SPCC	Zn PLATED
5	CURRENT CARRIER	COPPER ALLOY	Ni PLATED
4	SCREWS	STEEL	M8/Zn PLATED
3	COVER	PC	UL94V-2
2	HOUSING1	PC	UL94V-0
1	HOUSING2	PC	UL94V-0

	B	C	D
UL 标准/UL Standard:			
额定电压/电流/Rated Voltage(V)/Current(A)	600/155	600/155	600/5
EC 标准/IEC Standard:			
过压类别/Overvoltage Category/污染等级/Pollution Degree	III/3	III/2	II/2
额定电压/电流/Rated Voltage(V)/Current(A)	1000/155	1000/155	1000/155
螺丝扭矩/Torque Tightening(N·m/Lb.in)	M8, 4.5/40.00		
线径范围(硬线和软线)/Wire Range(rigid and flexible)(mm²/AWG)	0.5~70.0/20~2/0		
间距/Pitch(mm)/线数范围/Poles	27.00/N=01~12P		
使用温度范围/Operating temperature(℃)	-40~+125		
符合Rohs环保要求/Conform To Rohs	Yes		

REV	ECN	DESCRIPTION	DRFT	DATE

MATERIAL: /
MAT NO.: /
STATUS: /
APPD:
CHKD:
DRFT: ZhangJ 2020.05.18

SURFACE

宁波高松电子有限公司
DEGSON NINGBO DEGSON ELECTRICAL CO., LTD

NAME: DGR150-XXP-1Y-00A(H)

DRAWING NO.: DGR150-C01 REV T0

SIZE: A4 mm (inch) TYPE: CUSTOMER DRAWING SCALE: 1:2 SHEET 1/1