KEMET Part Number: C44BWF13470ZA0J

(44BWF13470ZA0J)

Film, Metallized Polypropylene, Power, KEMET, C44B, 0.47 uF, 5%, 2,000 V, 630 V

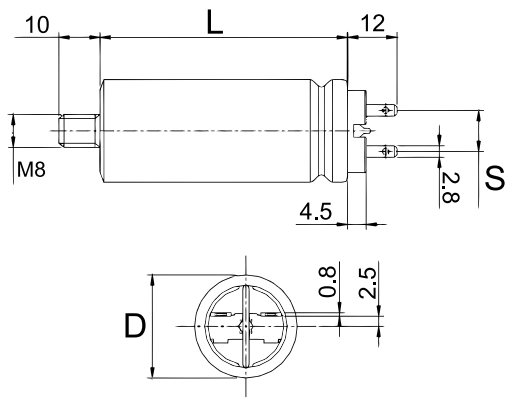

General Information	
Dielectric:	Metallized Polypropylene
Style:	Can
Supplier:	KEMET
Series:	C44B
RoHS:	Yes
Lead:	Fast On (1+1)
Miscellaneous:	Peak Voltage = 2400 VDC

Dimensions	
D	40mm +/-0.5mm
L	60mm +/-2mm
S	10mm +/-0.5mm

Specifications	
Capacitance:	0.47 uF
Capacitance Tolerance:	5%
Voltage DC:	2000 VDC
Voltage AC:	630 VAC
Temperature Range:	-40/+85C
Rated Temperature:	70C
Max dVdt:	750 V
Resistance:	15 mOhms (TYP)
Current:	6 Amps, 350 Amps (Peak)

Packaging Specifications	
Mounting:	Bolt - M8x10
Packaging:	Bulk
Packaging Quantity:	78

Statements of suitability for certain applications are based on our knowledge of typical operating conditions for such applications, but are not intended to constitute - and we specifically disclaim - any warranty concerning suitability for a specific customer application or use. This Information is intended for use only by customers who have the requisite experience and capability to determine the correct products for their application. Any technical advice inferred from this Information or otherwise provided by us with reference to the use of our products is given gratis, and we assume no obligation or liability for the advice given or results obtained.

© 2006 - 2016 IntelliData.net